EN - user manual

ELECTRIC DESIGN FIREPLACES

Preface

Dear customer,

Thank you for choosing Kalfire!
Kalfire designs and crafts fireplaces with the aim of bringing people together through sustainable fire. We hope this product will meet these two objectives in your home.

We thank you for your trust in Kalfire and wish you many enjoyable evenings with friends and family.

Beijko van Melick
Managing Director Kalfire BV

Table of contents

Preface		**28**
1	**Introduction**	**29**
1.1	CE declaration	29
2	**General safety regulations**	**29**
2.1	Additional general safety regulations for Atmos Heating option	30
3	**Guarantee**	**30**
4	**Existing electrical installation**	**30**
5	**Operation E-one, design your own experience**	**30**
5.1	E-one remote and symbols	30
5.2	Bluetooth pairing E-one remote	31
5.3	Control	31
5.4	Main switch	32
6	**Maintenance**	**32**
7	**Troubleshooting**	**33**
8	**Technical data**	**34**
9	**Declaration of Conformity**	**34**

1 Introduction

Kalfire prioritizes innovation and quality and is continuously working to further develop our products. We reserve the right to make changes to the form, technology and design of the products we sell. As such, the information and figures in this manual may change, and no claims can be made on their basis.

This manual is protected by copyright. All rights are reserved, including the right to copy, translate or distribute the content it contains.

The fireplace may only be installed by a qualified installer, in accordance with national or local regulations.

1.1 CE declaration

RED directive:	2014/53/EU
Safety:	IEC 62368-1
	EN 60335-1
	EN 60335-2-30
Health:	EN 62311
EMC:	EN 55032
	EN 301 489-1
	EN 61000-3
Radio:	EN 300 328
	EN 300 220-2
	EN 301 893

2 General safety regulations

When using electrical appliances, necessary precautions must always be taken to reduce and/or prevent the risk of fire, electric shock or personal injury.

- Ensure you read the general safety regulations.
- Leave maintenance and repairs to a qualified service provider to avoid the danger of electrocution.
- Caution: to reduce the risk of electric shock, do not remove the ember bed.
- None of the unit's parts can be serviced by the user; however, the glass reflector inside the fireplace and the front glass panel can be cleaned.
- Do not use the fireplace outdoors.
- To use the fire, the ambient temperature of the room in which it is installed must be between 5 and 30°C.
- Do not use the fireplace in the immediate vicinity of a bath, shower or swimming pool. The relative humidity must be below 85%.
- Use is permitted up to 2000 m above sea level.
- Do not place the fireplace directly under a wall socket or junction box.
- If a malfunction occurs, set the main switch on the front panel to 0 (off). (See section 5.4.)
- Do not place the unit on carpet or rugs.
- To prevent overheating of the fireplace, it must not be covered. Do not place any material in front of or against the unit and never obstruct the air circulation around the unit. When materials overheat, there is a risk of fire.
- The fireplace may be operated by those age 8 or over, or those with reduced physical, sensory or mental abilities provided they have demonstrated an understanding of the instructions relating to the safe use of the fireplace and the potential dangers. Children should not be allowed to play with the fireplace and must not clean the fireplace or perform user maintenance without parental supervision.
- Children under the age of 3 should not be allowed near the fire without adult supervision. Children from age 3 to 7 may only switch the fireplace on/off provided that it is installed in its normal position of operation and they have been given instructions on how to use it safely and understand its potential dangers. Children under the age of 8 must not clean the fireplace or perform user maintenance.
- If the power lead becomes damaged,
- it must be replaced by the supplier or another qualified service provider to avoid risks.

- **Additional general safety regulations for the Atmos Heating option**
- The fireplace does not have an automatic temperature regulator. If the fireplace is installed in a small room, each person present in the room must be able to leave the room independently. Any person who is not able to do so must be continually supervised.
- Some parts of the unit can become very hot and could potentially cause burns. Always supervise children and vulnerable people around the fireplace.
- Furniture, curtains and other combustible materials must be placed at least one metre away from the fireplace. For safe distances, see the diagrams below.

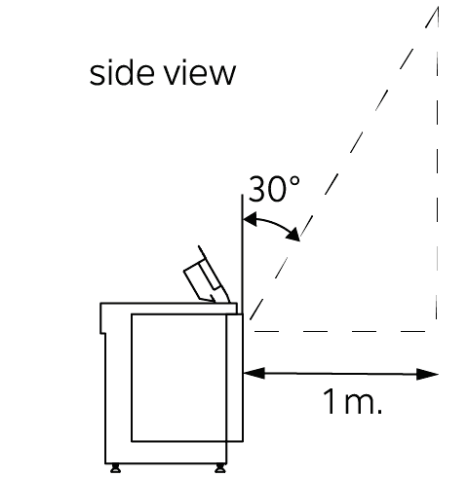

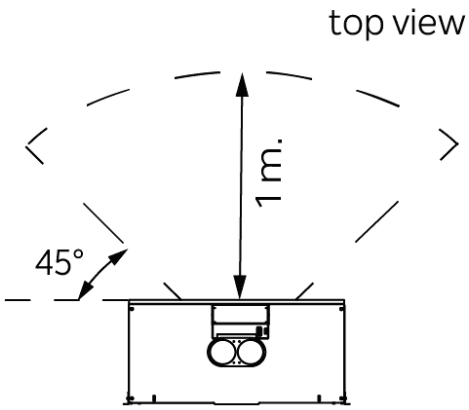

3 Guarantee

Kalfire prioritizes craftsmanship. The Kalfire E-one has been fully designed and developed in the Netherlands, and is equally produced entirely on Dutch soil. We stand behind the quality of our products, offering a warranty period on our electric fire of five years or up to 10,000 burning hours. The Atmos Heating function of the fireplace is guaranteed under a two-year warranty.

4 Existing electrical installation

The unit must be connected to a 230V AC/50Hz 13 A earthed mains socket..

5 Operation E-one, design your own experience

5.1 E-one remote and symbols

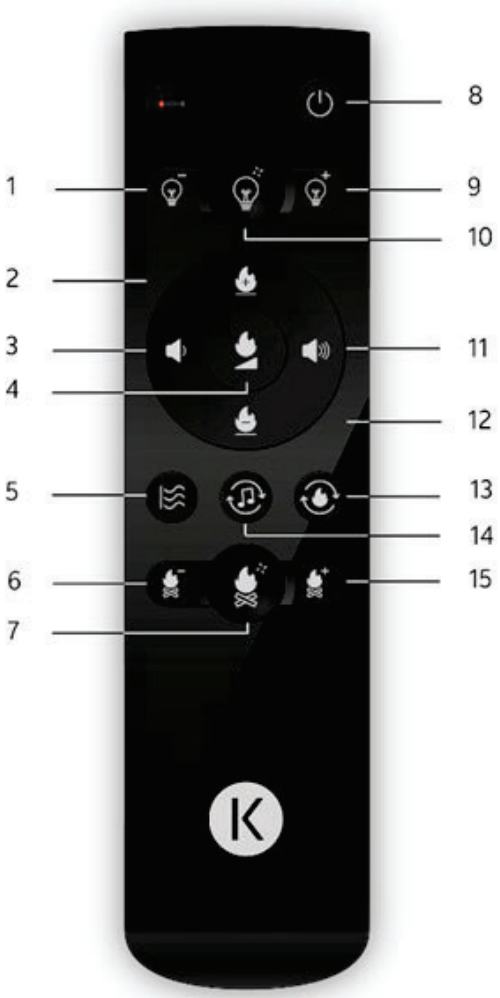

1. Dim Atmos Lighting
2. Increase flame height /shuffle flame height
3. Lower volume of Kalfire Sound
4. Adjust flame intensity
5. Atmos Heating on/off
6. Lower ember bed intensity
7. Dynamic ember bed on/off
8. Power on/off / Anti-reflect function
9. Brighten Atmos Lighting
10. Dynamic Atmos Lighting on/off
11. Raise volume of Kalfire Sound
12. Decrease flame height
13. Adjust flame type
14. Adjust sound type
15. Higher ember bed intensity

5.2 Bluetooth pairing E-one remote

When the fireplace is used for the first time, the remote control will connect to it automatically. If the following symbol is projected on the rear screen of the fireplace, the remote control must be paired manually.



Manual pairing is done by pressing the  and  buttons on the remote control at same time.

Release the buttons when a red LED light flashes in the top-left corner of the remote control. You will know when the remote control is successfully paired with the E-one when the Bluetooth symbol is no longer visible.

5.3 Control



Switching the fireplace on

Briefly press the on/off button. It takes about 30 seconds for the fireplace to fully start up. You can ignore any messages displayed on the screen.



Adjust flame type

You can choose one of three different flame types: dynamic wood fire (A), gas fire with a bright, light flame colour (B), or gas fire with a warm, darker flame colour (C).



Adjustable Flame Height

Provided that it is indicated on the display in the fireplace, the flame height is adjustable from position 1 to 5.



Position 6 is the flame shuffle mode, which creates a dynamic play of flames. of varying heights.



Adjust flame intensity

This function allows the brightness of the flames to be adjusted according to the ambient light in the room.



Ember bed intensity

Hybrid LED E lighting under the fire simulates a realistic glowing bed of embers. The intensity is adjustable from levels 1 to 5.



Switch on the dynamic ember bed button (7) to make the glowing ember bed flicker. In this mode, the intensity is adjustable from levels 1 to 5 using the ember bed intensity buttons (6) (15).

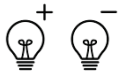

Adjust Atmos Lighting

Atmos Lighting projects shadow effects on the ceramic logs, enhancing the ultra-realistic fire experience. The intensity is adjustable from levels 1 to 5.



The Dynamic Atmos Lighting button provides a varied flickering effect. In this mode, the intensity is also adjustable from levels 1 to 5 using the Atmos Lighting + and - buttons.



Adjust Kalfire Sound

Kalfire Sound provides a true sensory experience with the audio of burning wood in combination with lifelike sparks. You can choose between the warm, crackling sound of pine wood or the calmer, relaxing sound of burning beech wood. The volume can be adjusted between levels 0 and 5.

Switch on/off Atmos Heating
The Atmos Heating element provides a pleasant radiant warmth, contributing to the ultra-realistic fire experience. Available as an option.

Switch on/off anti-reflect function
The anti-reflect function provides an attractive view of the logs and hearth when the fire is not burning.

To switch to this mode directly from a burning fire, briefly press the on/off button and wait until the fire is out. You can ignore any message displayed. Use the Atmos Lighting + and - buttons to adjust the light intensity.

To activate the anti-reflect function when the fire is off, press and hold the on/off button for 3 seconds, then use the Atmos Lighting + and - buttons to adjust the light intensity.

Press the on/off button for approximately 3 seconds to switch the appliance off completely. It takes about 30 seconds. You can ignore any message displayed.

Atmospheric ember bed
The glow bed can be switched on separately when the E-one is completely switched off. With the button Higher ember bed intensity (15) you can switch on the glow bed and increase the intensity. By pressing the Lower ember bed intensity button (6) you can lower the intensity. No flames are visible.

If only the glow bed is switched on, you can switch the fire on by briefly pressing the on/off button.

5.4 Main switch
Power to the fireplace can be switched off using the power switch (0 = off /I = on) on the front. The switch is located at the top right of the unit, behind the metal flap (see figure), and can be accessed by lifting up the flap. Note that if the unit is completely disconnected from the mains, the unit will reset to the factory settings.

Please note: After switching the fire on again with the main power switch, the complete start-up cycle of the Kalfire E-one takes about 4 minutes.

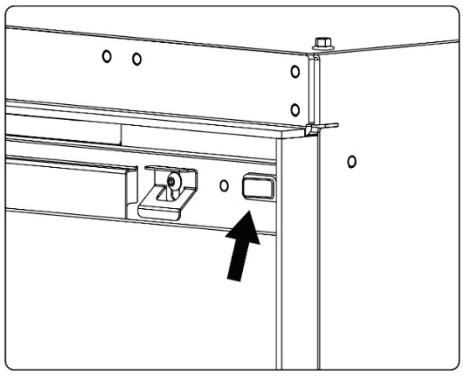

IMPORTANT: If you do not intend to use the unit for a long period, we advise you to switch it off completely by setting the power button to the 0 position.

6 Maintenance

Black lacquered surfaces
Use a microfibre or other soft cloth to clean the black powder-coated parts of the fireplace. The use of sandpaper, steel wool, brushes or scouring pads should be avoided as these will scratch the finish.The glass reflector placed at an angle in the fireplace must be treated with care.

Glass reflector
The glass reflector placed at an angle in the fireplace must be treated with care.

Instructions for cleaning the glass reflector:

- Clean the glass only with water: cleaning products are not recommended.
- Dust or dry the glass with a clean microfibre cloth.
- Always dry the glass completely: water residues are difficult to remove.

Do not use cleaning products, abrasives, cerium oxide, etc. to clean the glass reflector, and never use hard materials such as steel wool, razor blades, etc. on the glass.

To clean the glass reflector, first remove the front glass panel from the fireplace, following the steps shown in figures 1 to 3.

1.

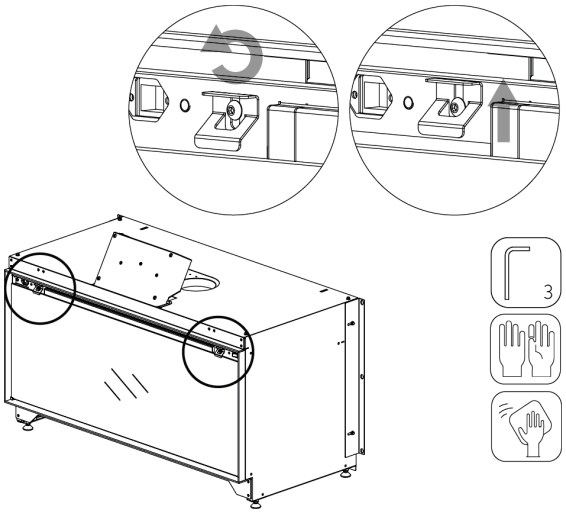

2.

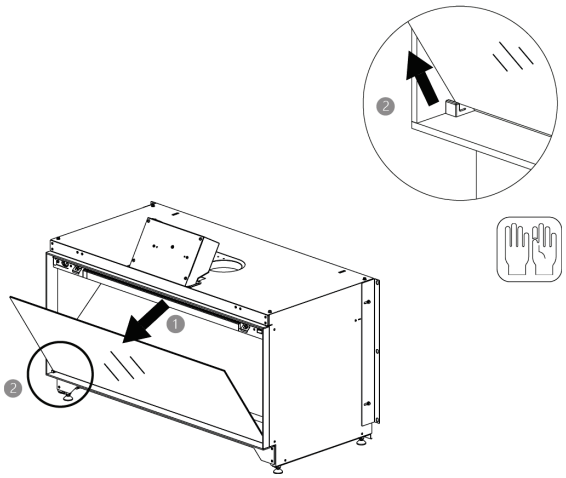

3.

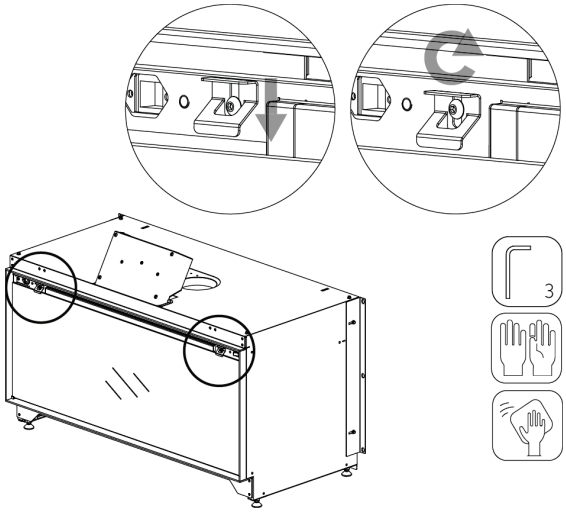

7 Troubleshooting

In the event of a fault, first check the points below. If the problem persists, contact your dealer or installer.

The fire does not start.

- Check that the main switch at the top right of the appliance is switched on. (See section 5.4.)

The remote control is not responding: the red light at the top left of the remote control is <u>not lit</u> and the Bluetooth symbol is visible in the fireplace.

This indicates that there is no connection between the remote control and the fireplace.

- Pair the remote control with the fireplace. (See section 5.2.)
- Replace the batteries of the remote control.

8 Technical data

KALFIRE
FIREPLACES

Models: Kalfire E-one 100F / 100F *FR* / 100S
130F / 130C / 130S
160F / 160S
190F / 190S
Input: 220 - 240 ~ 50Hz
Power: 2100 Watt

SN:

WARNING: Do not cover heater!

WARNING: Hazardous voltage inside

Only authorized personnel may service this equipment

Energy consumption per operating mode	
standby mode (W)	1.4
standby mode, incl. anti-reflect function (W)	17
full operating mode*, excl. Atmos Heating (W)	101
full operating mode*, incl. Atmos Heating (W)	2075

**full operating mode: Dual HD Flame technology, hybrid LED E, Kalfire Sound*

9 Declaration of Conformity

Manufacturer: Kalfire B.V.
Geloërveldweg 21
NL – 5951 DH, Belfeld
Trade Mark: Kalfire

The manufacturer hereby declares that the following electric fireplaces:

Model: Kalfire E-one
Type/Serial number: 100F / 100S / 100F *FR*
130F / 130C / 130S

are manufactured in accordance with the following European directives and standards:

RED directive: 2014/53/EU
Safety: IEC 62368-1
EN 60335-1
EN 60335-2-30
Health: EN 62311
EMC: EN 55032
EN 301 489-1
EN 61000-3
Radio: EN 300 328
EN 300 220-2
EN 301 893

The declaration is only valid, if the installation of the product is carried out according to the instructions delivered with the product and in accordance with the local legislation.

1 December 2023

Beijko van Melick
Managing Director Kalfire BV7

12-2023 NL/FR/DE/EN V01

KALFIRE
FIREPLACES

CONNECTING
PEOPLE
THROUGH
SUSTAINABLE
FIRE.

621038

Geloërveldweg 21 - 5951 DH Belfeld
info@kalfire.com - www.kalfire.com